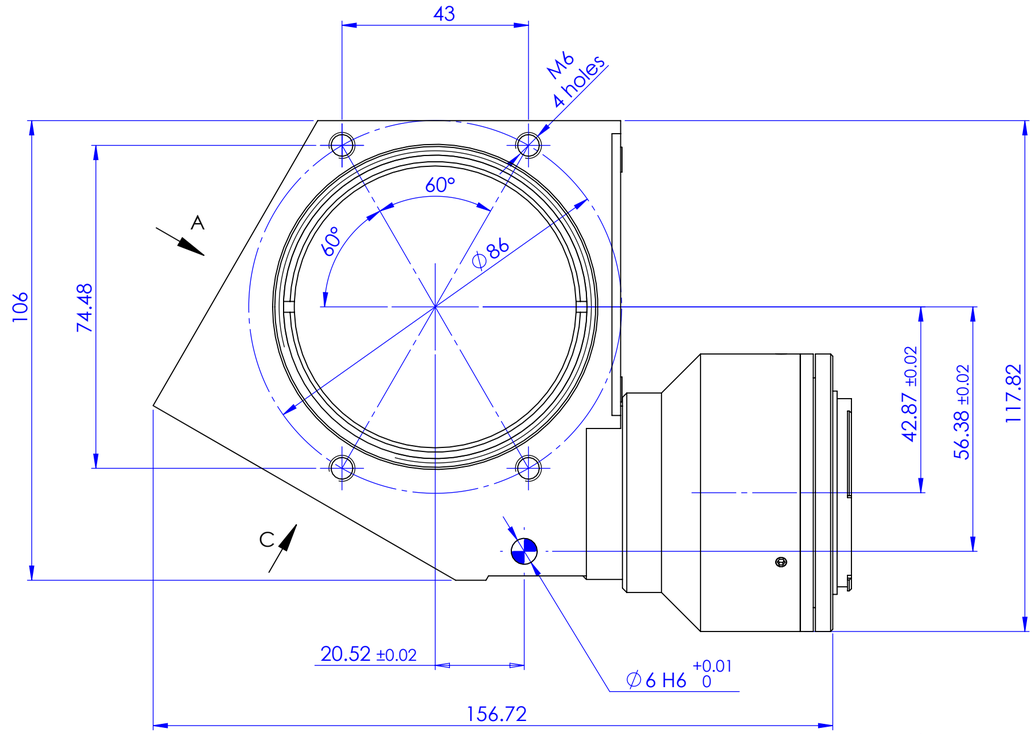

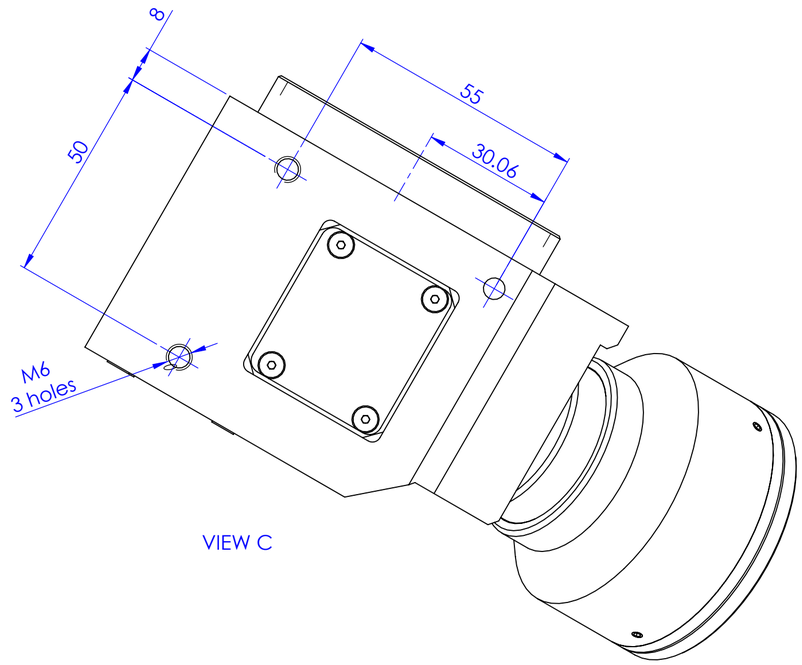

VIEW C

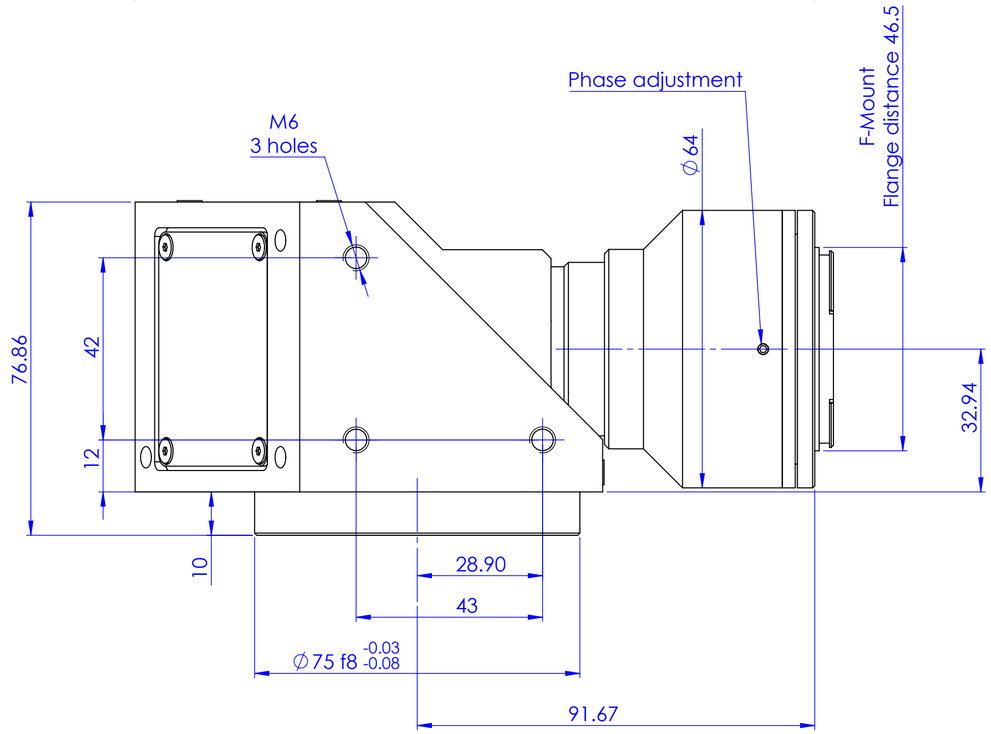

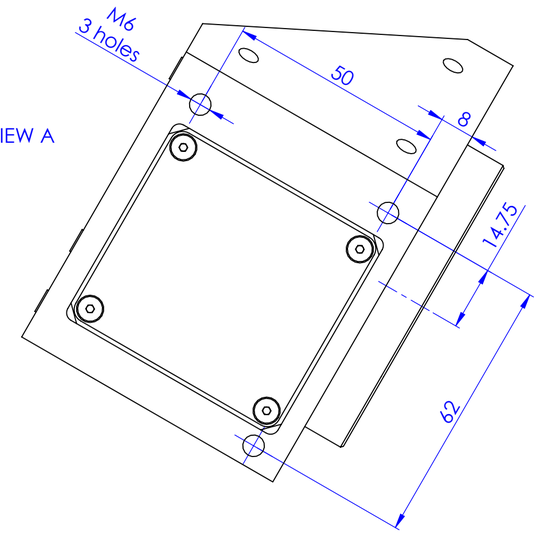

VIEW A

Material	N.A.	Mass	1344 g
Surface treatment	N.A.	Scale	1:1
Part No.	CO24024		
Description	TCCR4M048-F		
Drawing No.	DP 24024-C	Sheet	1/1

Geometrical tolerance (ISO 2768-2) Class K
Linear tolerance (ISO 2768-2) Class m

0.5 ÷3	>3÷ 6	>6÷ 30	>30÷ 120	>120 ÷400	>400÷ 1000	>1000 ÷2000	>2000 ÷4000	
±0.1	±0.1	±0.2	±0.3	±0.5	±0.8	±1.2	±2	Undimensioned radii

Undimensioned bevels 0.5x45°
Undimensioned radii R 0.5

all dimensions are in mm

	Date	Name
Designed	04/03/2015	Vasconetto
Drawn	16/07/2015	Rodella
Checked		

OPTO ENGINEERING

OPTO ENGINEERING S.r.l. - Mantova, Italy - Tel. +39 0376699111 - www.opto-e.com

Secret and confidential - All rights reserved - No copy, dissemination or circulation is allowed unless specifically authorized in writing by OPTO ENGINEERING S.r.l. - Any violation shall be legally prosecuted.